T14-BM25-04

- **Sepcification**
- .374" PCB Barrier Terminal Blocks
- Terminal style : M25
- Pitch : 9.50 mm

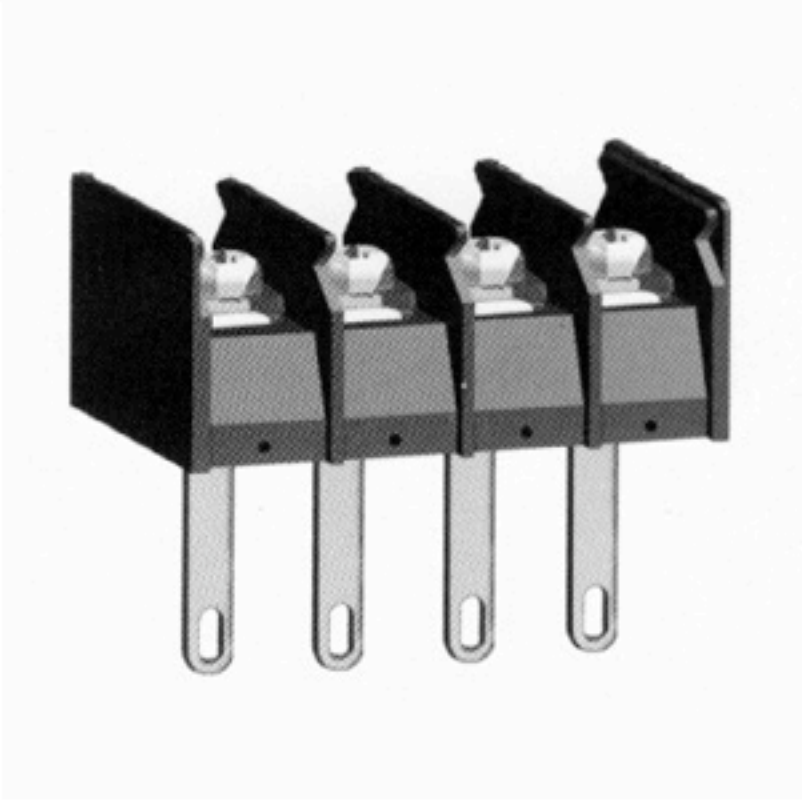

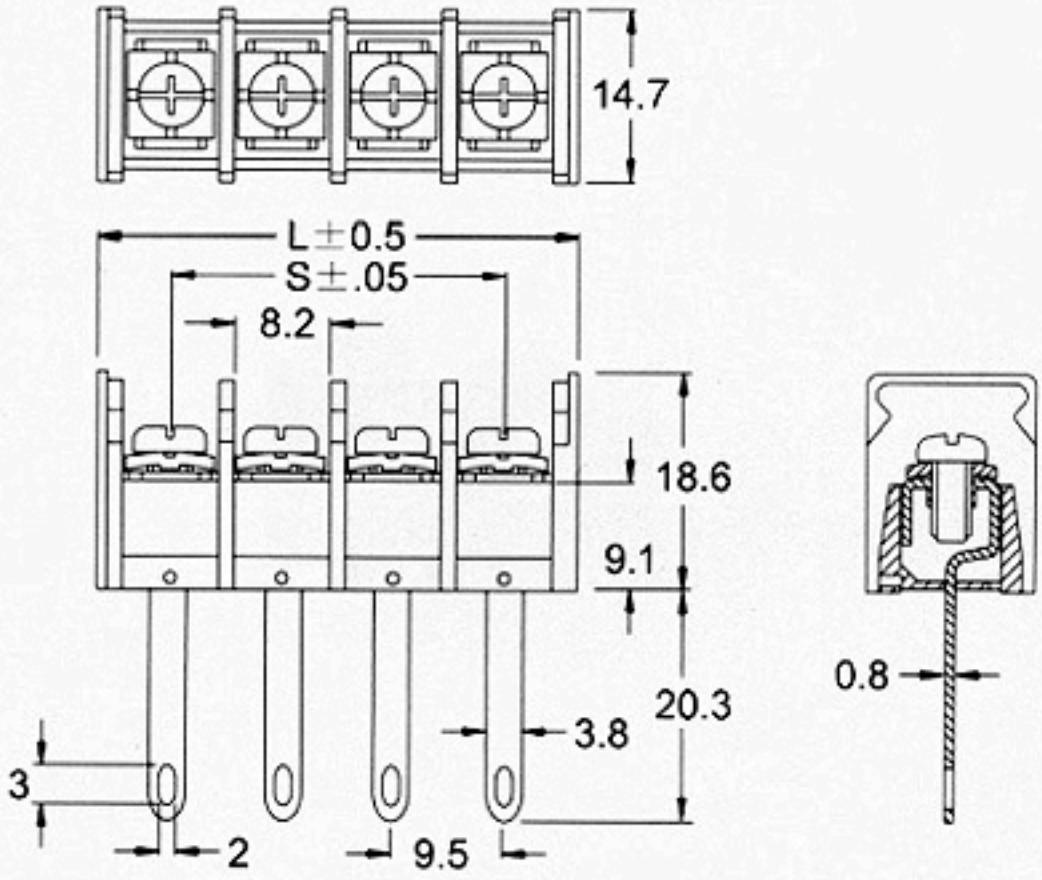

Poles	2	3	4	5	6	7	8	9	10	11	12	13	14	15	16
L(mm)	22.0	31.5	41.0	50.5	60.0	69.5	79.0	88.5	98.0	107	117				
S(mm)	9.50	19.0	28.5	38.0	47.5	57.0	66.5	76.0	85.5	95.0	105				
Poles	17	18	19	20	21	22	23	24	25	26	27	28	29	30	
L(mm)															
S(mm)															