TA7-BM60-04

- **Sepcification**
- .512" PCB Barrier Terminal Blocks
- Terminal style : M60
- Pitch : 13.00 mm

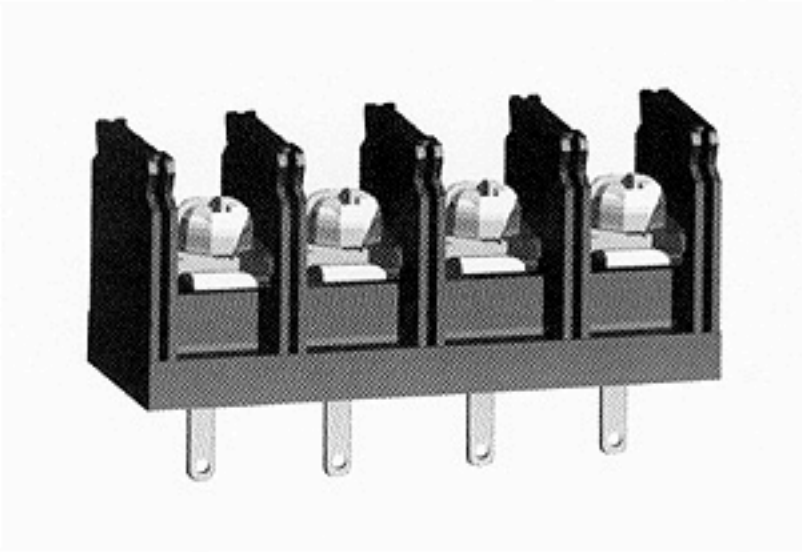

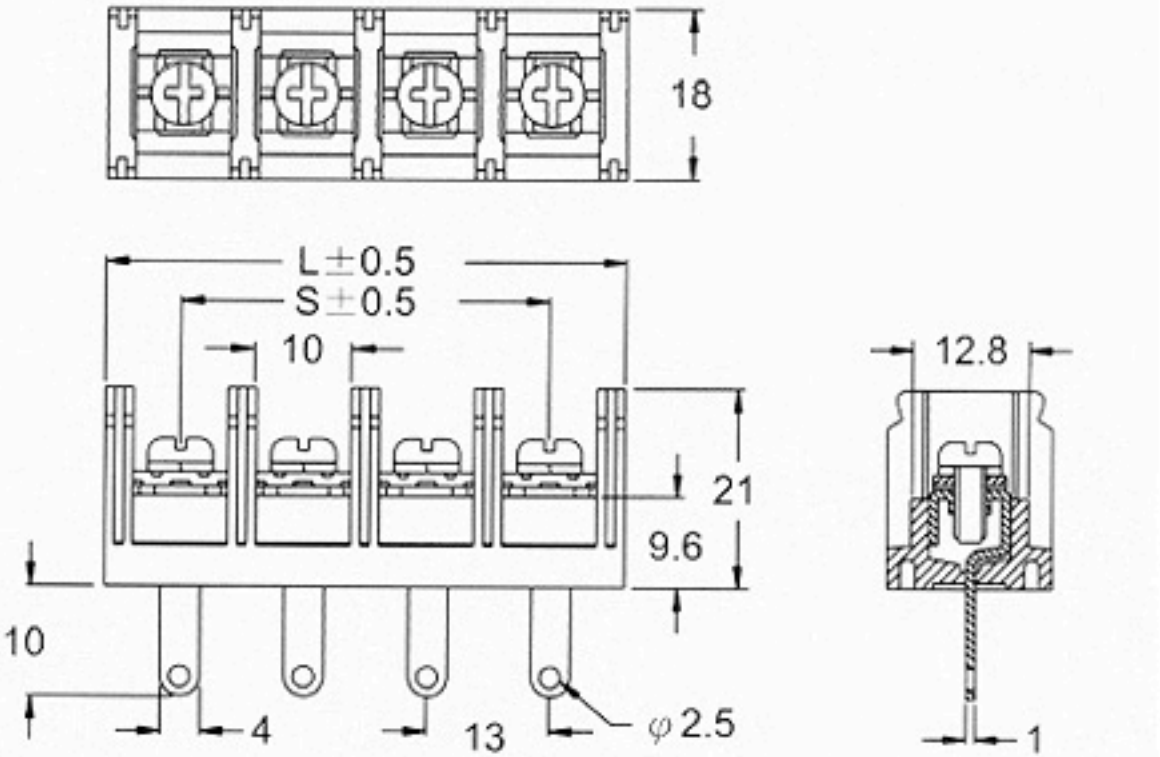

Poles	2	3	4	5	6	7	8	9	10	11	12	13	14	15	16
L(mm)	29.0	42.0	55.0	68.0	81.0	94.0	107	120	133	146	159				
S(mm)	13.0	26.0	39.0	52.0	65.0	78.0	91.0	104	117	130	143				
Poles	17	18	19	20	21	22	23	24	25	26	27	28	29	30	
L(mm)															
S(mm)															