TED-339-03

- **Sepcification**
- .531" PCB Barrier Terminal Blocks
- Terminal style : 39
- Pitch : 13.50 mm

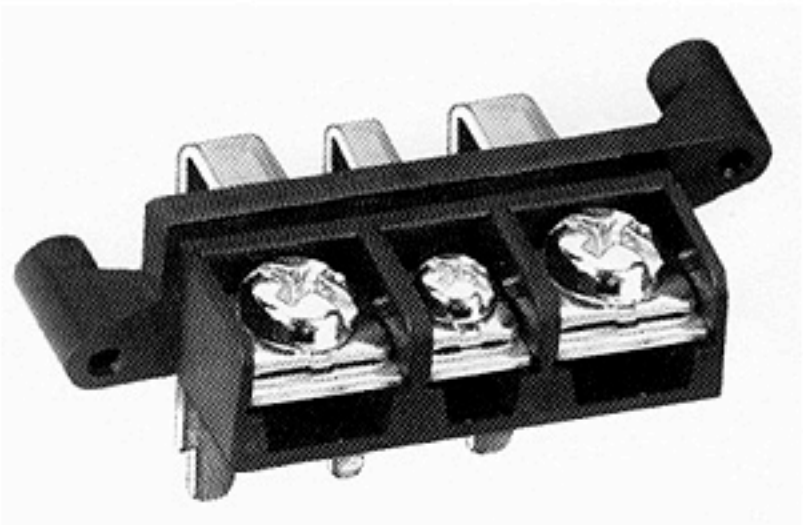

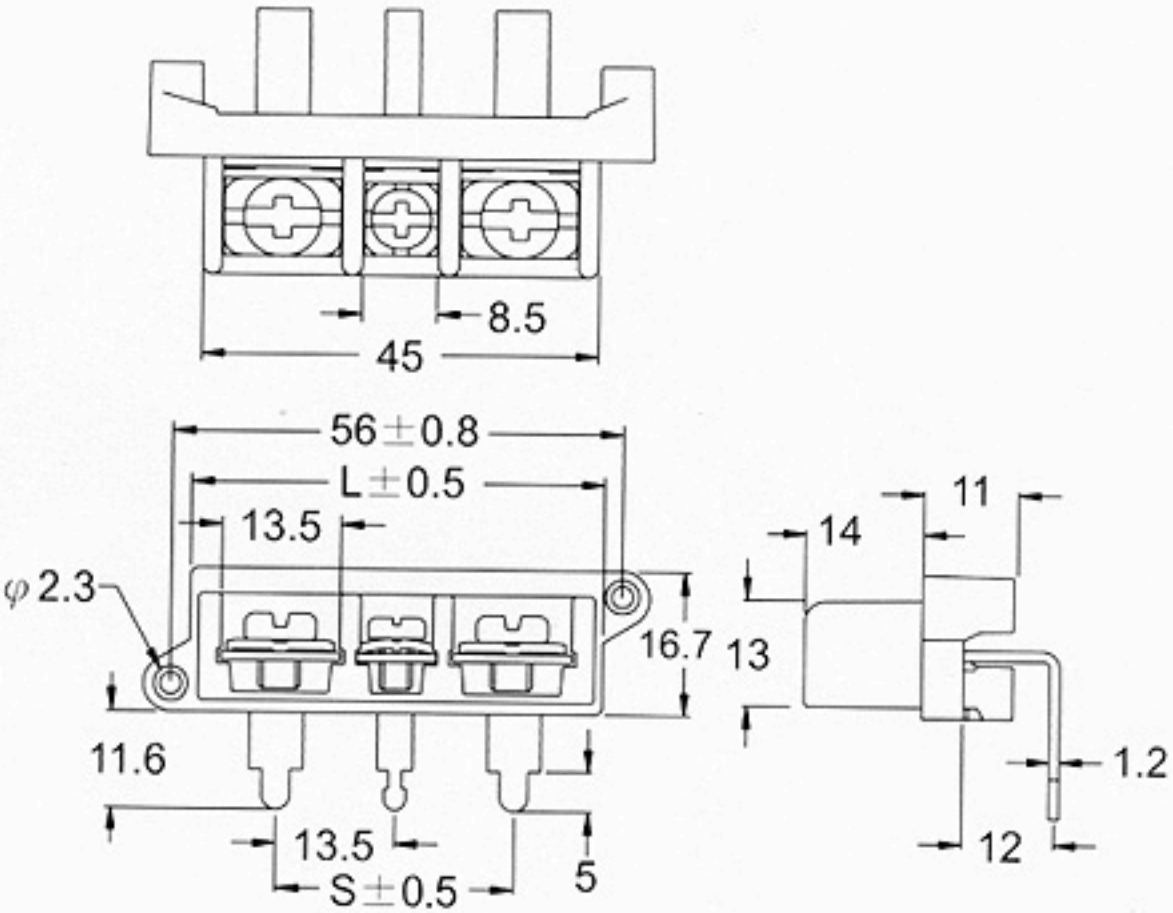

Poles	3														
L(mm)	47.0														
S(mm)	27.0														